SYDNEY Bathroom Accessories

PRODUCT SPECIFICATION SHEET

SEATTLE TOWEL RING

SEA-TRSQ



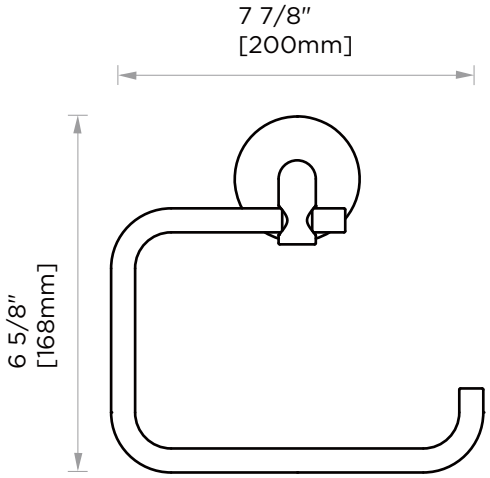

PRODUCT NAME: SEATTLE TOWEL RING

PRODUCT CODE: SEA-TRSQ

MATERIAL:
ZINC
STAINLESS STEEL 304

KEY FEATURES:
MODERN DESIGN
ZINC+STEEL COMPOSITION
CAST BACKINGS
WALL MOUNTED

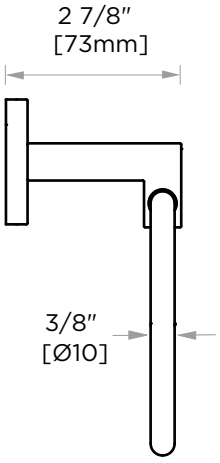

AVAILABLE FINISHES:

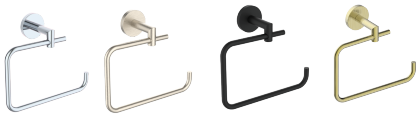

- POLISHED CHROME (PC)
- BRUSHED NICKEL (BN)
- MATTE BLACK (MB)
- BRUSHED BRASS (BRB)

NOTE: Dimensions and specifications are subject to change without notice.